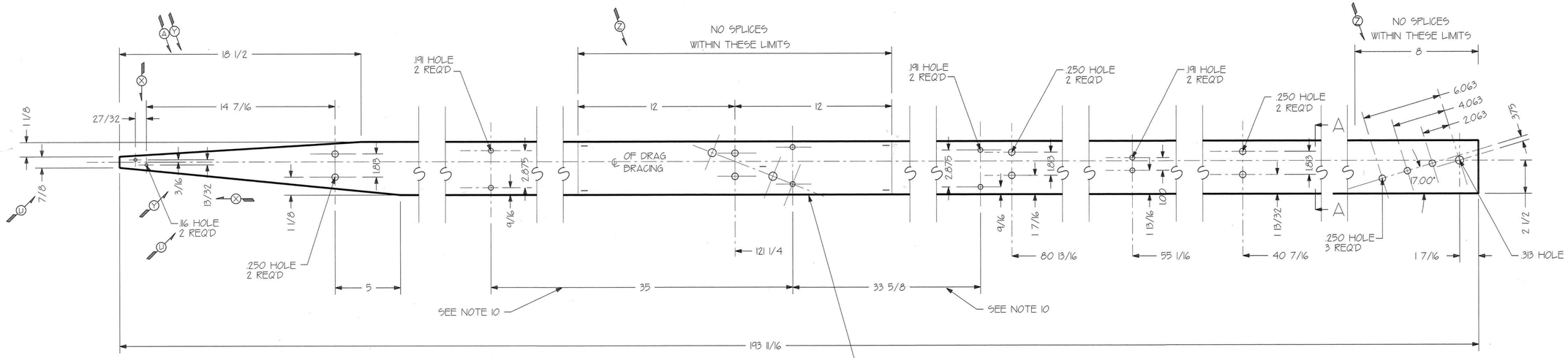

3 IN = 1 FT

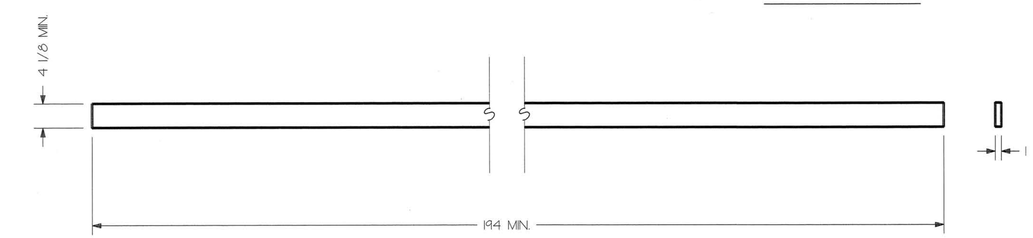

-3 SPAR (BLANK DETAIL)

1 IN. = 1 FT.

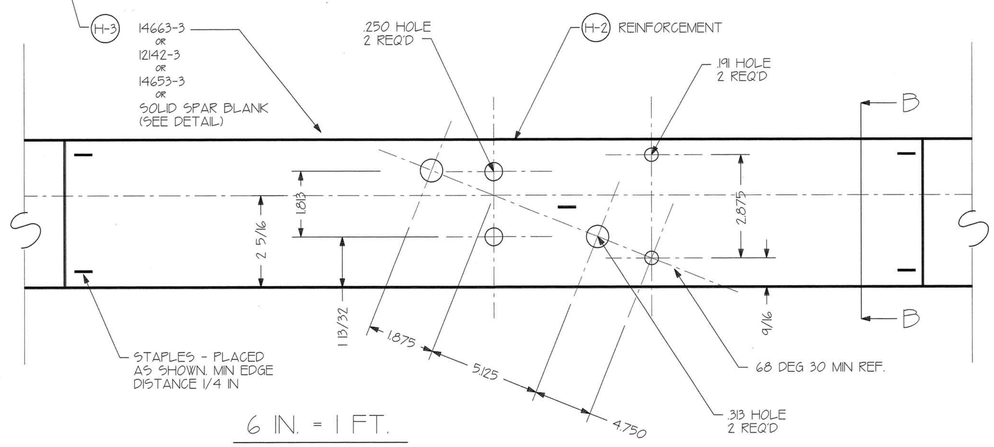

6 IN. = 1 FT.

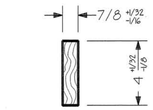

SECTION A-A

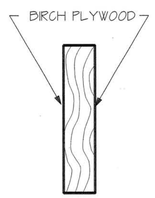

SECTION B-B

NOTES:

1. SEE DWG H12142 OR14663 FOR LAMINATION DETAILS
2. SEE DWG 13293 OR 15753 FOR MAJOR SPAR SPLICES
3. SPARS GIVEN TWO COATS OF CLEAR WOOD LAQUER BEFORE AND ONE COAT AFTER INSTALLATION IN WINGS --DI- ONA- COATS ON EDGES OF LAMINATED SPARS BEFORE ASSEMBLING INTO WING.
4. ALL SPARS USED IN BRITISH EXPORT SHIPS MUST BE OF FULL DIMENSIONS IN BOTH WIDTH AND DEPTH NEW TOLERANCES SHOWN IN SECTIONS DO NOT APP.
5. GLUE USED MUST BE CASEIN TYPE FEDERAL SPEC. C-G-456 OR PHENOL TYPE RESIN GLUE SPEC. #14124.
6. THE ANNUAL GROWTH LAYERS OF THE WOOD MUST MAKE AN ANGLE OF 45 DEG OR MORE WITH THE SPAR FACE FOR AT LEAST 75% OF THE WIDTH OF EITHER VERTICAL FACE MEASURED AT THE ENDS OF THE SPAR.
7. VERTICALLY LAMINATED SPARS SHALL BE FINISHED SO THAT THE LAMINATION THICKNESS WILL BALANCE ABOUT THE VERTICAL CENTER LINE OF THE CROSS SECTION, WITHIN 3/32 IN.
8. FITTING HOLES TO COINCIDE WITH RELATED HOLES IN MATING PARTS.
9. HOLE DIA. TOLERANCE +001/-010
10. AILERON HINGE BRACKET ATTACH HOLE CENTERS MUST COINCIDE WITH CENTERS MUST COINCIDE WITH CENTERS OF RELATED PARTS ON H3004 & H42585.

PARTS MARKED THUS △ ALSO ON DWG. H13833(J3L-4A) & H16433 (J3)
PARTS MARKED □ ON H16433 (J3)

-	REDRAWN WITHOUT CHANGE	10-10-44	RDR					
-	NOTE 5 REVISED	9-19-44	IDB					
A	14 7/16 WAS 14 1/2	1-20-44	CHS					
Z	NOTES REVISED	1-11-44	AIN					
Y	14 1/2 WAS 14 7/16, 3/16 DIM. ADDED	11-26-43	CEK					
X	13/32 WAS 5/16, 27/32 WAS 7/8	11-26-43	CEK					
W	WEIGHT ADDED	11-10-43	LR	TG-8	2	H13004		
V	NOTE 2 REVISED	9-2-43	RRF	L-4B	2	H13004		
U	7/8 +/- 1/16 WAS 7/8, .166 HOLE ADDED	9-5-43	CEK	L-4A	2	H13004		
I	REDRAWN AND REVISED	- - 43	LE-	J3	2	H13004		
LETR	DESCRIPTION	DATE	APPVD	MODEL	PER SHIP	NEXT ASSM.	SUPERSEDES	SUP. BY

DWG REF ONLY	H15753			SOLID SPAR MAJOR SPLICES
DWG REF ONLY	H13293			SPAR MAJOR SPLICE WITH PLATES
10				3/8 CHISEL POINT BOSTICH STAPLES
	H14603-3 OR H12142-3 OR H14653-3			REAR SPAR (BLANK)
□	1	3	1x4 1/8x194	YELLOW POPULAR AN-P-71 OR WESTERN HEMLOCK AN----- OR SETHA SPRUCE AN-S-6 OR ORFORD CEDAR AN-C-72 OR WEST COAST DOUGLASS FIR AN-4-41 OR NOBILE FIR AN-F-6
△	2	2	3/64x4x15	BIRCH PLYWOOD
QTY.	PART NO.		SIZE	MATERIAL DESCRIPTION

MANUFACTURING PRACTICES – HENDERSON SPECIFICATION #

FINISH – HENDERSON SPECIFICATION #

		SIGNATURES		DATES
		DRAFTSMAN	MDD	10/2/96
		CHECKER	DOH	10/2/96
		PROJ. ENGR.	DOH	10/2/96
		MFG.		
NEXT ASSY.	USED ON	MAT'L		
UNLESS OTHERWISE SPECIFIED DIMENSIONS ARE IN INCHES		STRESS		
		CONTRACT		
TOLERENCES: +/- 1/64 ANGLES +/- .5 DEGREES 2 PLACE DECIMALS +/- .010 3 PLACE DECIMALS +/- .001		MICROFICH FRAME		

Henderson Enterprises, Inc.
Felton – Delaware

DRAWING TITLE

SPAR ASSEMBLY – REAR

SIZE	CODE IDENT NO	DRAWING NUMBER
		H11223
SCALE NOTED	WT	SHEET OF

NOTE:

THIS DRAWING IS THE PROPERTY OF HENDERSON ENTERPRISES, INC. AND MAY NOT BE USED OR REPRODUCED WITHOUT THE PERMISSION OF THE OWNER. THE INFORMATION PRESENTED ON THIS DRAWING IS CONSIDERED CONFIDENTIAL.